Chapter 24, Inc.
Madison, Wisconsin

Society of Broadcast Engineers *May 1999*

Next Meeting:

Thursday, May 20, 1999

EAS for Cable TV

Pizza at 6:00pm

Meeting and Program at 7:00pm

at WISC-TV conference room 7025 Raymond Rd

In This Issue:

Some Parting Words...

By Fred Sperry

As most of you are aware, my reign as Chapter Chair is nearing its end following the April elections. It has been a great experience for me to serve as Chair for Chapter 24 the past two years.

Reflecting back on the last two years, even though I didn't accomplish everything I set out to, overall I'm pleased with the Chapter's accomplishments during this time. In some chapters, the success of the chapter falls solely on the Chapter Chair. That certainly isn't the case with Chapter 24. The officers, committee appointees and the general membership play a major role in Chapter 24's success (the recent DTV Demo at the UW-Engineering Expo is a good example). For this reason, everyone can take credit for these accomplishments.

Congratulations to the new slate of Chapter Officers for election (or re-election) to their positions. There are a lot of exciting challenges ahead of them and the Chapter including hosting the National SBE Meeting along with the Broadcaster's Clinic in October. I trust you will continue to support Chair Kevin Ruppert and the rest of the Officers as you have supported me for the past two years.

Finally, let me take this opportunity to encourage those of you who have never held an office in Chapter 24 to consider running for an office when the opportunity arises. After nine years as an officer of Chapter 24, I can say with all confidence that the benefits one gains by being involved with our Chapter at this level far outweighs the work involved. This is especially true in a chapter like ours where there are many individuals willing to help out, so please consider anything you can do to continue to help maintain Chapter 24 as a strong chapter.

Thank you again for all your support you have given me during my tenure as Chapter Chair, and I look forward to my continued involvement in Chapter 24 and the SBE.

Digital Television Demonstration A Success!

By Steve Paugh

The SBE Chapter 24 DTV demonstration presented during the April UW College of Engineering EXPO was a huge success. The public was impressed by the detailed images that DTV can provide. We had a large screen projection system that was playing back SONY-HDCAM material that we shot at various campus locations. We also played some tapes we shot last fall of the Wisconsin-Minnesota football game. In addition, we borrowed a tape of the John Glenn shuttle launch. The Hughes/JVC Image Light Amplifier video projector, loaned to the College of Engineering for this exhibit, cast a 24' diagonal image onto the front on the room to an attentive audience.

At the back of the room we had a Ku band IRD set up that was receiving a continuous loop of PBS programming. This was displayed on a 30" Panasonic direct view monitor. The IRD also had a VGA output that we fed to a standard 20" Windows 95 computer monitor. The VGA monitor was the hit of the show. People were astonished at the detail and vivid color rendition that the inexpensive ($700) VGA monitor could deliver, especially when compared to the $8000 commercial DTV set.

We also had a spectrum analyzer set up so people could see the off-air DTV Ch26 and the off-air NTSC Ch27 RF spectrum side by side. We had numerous handouts available and answered many questions. The left over literature will be made available at the SBE booth this fall during the Broadcast Clinic. The SBE is to be congratulated on giving the viewing public a favorable impression of Digital TV!

I would like to thank all of the people and vendors who helped make the demo a success, my apology if I've missed

(continued on page 3)

CHAPTER 24 OFFICERS

CHAIR:
Kevin Ruppert (WISC-TV)
W - 271-4321
kruppert@wisctv.com

VICE-CHAIR:
Tom Smith (WHA-TV)
W - 263-2174
smithtc@vilas.uwex.edu

SECRETARY:
Lloyd Berg (WHPN-TV)
W - 270-5700
lloydberg@earthlink.net

TREASURER:
Stan Scharch (WISC-TV)
W - 271-4321
sscharch@wisctv.com

COMMITTEE APPOINTEES

Program Committee:
Mark Croom 271-1025
Denise Maney 277-8001
Kerry Maki 833-0047
Steve Zimmerman 274-1234

Membership:
Paul Stoffel
stoffel@vilas.uwex.edu

Sustaining Membership and Past-Chair:
Fred Sperry W - 264-9806
fsperry@ecb.state.wi.us

Special Events: Kevin Ruppert

Certification and Education:
Jim Hermanson 836-8340
jmh@execpc.com
Tim Trendt (UW-Platteville)

Frequency Coordination:
Tom Smith W - 263-2174
smithtc@vilas.uwex.edu

National SBE Chapter Liaison:
Leonard Charles
W - 271-4321 FAX - 271-1709
lcharles@wisctv.com

April Business Meeting Minutes

The SBE Chapter 24 meeting for April 1999 was held at J.T. Whitney's in Madison, Wisconsin. Fred Sperry, Chair, called the meeting to order at 7:05 PM. There were 15 members and two guests present, 15 were certified.

Fred thanked Herb VanDreil from Panasonic for sponsoring this evening's dinner. The March minutes were approved as published. Fred announced that there were 25 sustaining members, with Alpha Video and National Tower Service as recent renewals.

Denise Maney, Program Committee, announced that the planned May meeting would be at WISC-TV on Thursday May 20th.

Jim Hermanson, Certification Committee, announced that exams would be given between June 11th and 21st.

Tom Smith, Frequency Coordinator, said that the NFL continues to have coordination problems, but that it should have little effect in the Madison area.

Leonard Charles, SBE Liaison, announced that the SBE has a new 84 page Chief Operator handbook available, that the SBE Leadership Skills seminar deadline is April 30, and that nominations for SBE national recognition can now be made.

Steve Paugh announced that 15,000 people attended the UW Engineering Expo, where SBE Chapter 24 and local broadcasters put on an excellent demonstration and explanation of DTV for the public.

New Business: Leonard Charles announced the UW-Platteville Symposium would be held on April 28.

Tom Smith announced that TV Technology magazine is now asking for a $35 a year fee, where in the past it was supplied to broadcasters at no cost. It was the consensus that most broadcasters will ignore this request.

Outgoing Chair, Fred Sperry, thanked the membership for their support. He was pleased that our efforts toward incorporation were successful, and thanked his fellow officers, committee members and appointees. Fred especially recognized Mike Norton for publishing our newsletter, Denise Maney for Program Committee work, and Leonard Charles for his EAS and National Liaison work. Finally, Fred pledged to stay active in, and continue to support Chapter 24.

The membership thanked Fred for his work and continuing commitment to Chapter 24. Steve Paugh then held our annual elections. The Business meeting was adjourned at 7:30 PM

The evening's program consisted of an open discussion of the 1999 NAB convention held earlier this month.

Submitted by Lloyd Berg, Secretary.

Election Results

Submitted by Steve Paugh, Elections Chair

The Chapter 24 election ballots were certified and counted on April 29th. There are 72 voting members in Chapter 24. We received 17 ballots and all ballots were certified as valid. Fifteen ballots were collected at the April 27th chapter meeting and two ballots were received by mail prior to the chapter meeting.

Congratulations to our newly elected officers.

Chairperson- Kevin Ruppert
Vice Chair- Tom Smith
Secretary- Lloyd Berg
Treasurer- Stan Scharch

The nomination committee members were Steve Paugh, Jim Hermanson and Denise Maney.

DTV Demo Success (continued)

anyone: Craig Bluschke, Bob Perras/ UW College of Engineering, Hughes/ JVC/Video Images, Kevin Peckham/ Sony Broadcast, the management of WISC-TV, Mike Kulis, Stan Scharch, Kevin Ruppert, Neal McLain, Mike Norton, WHA-TV/PBS/Paul Stoffel, Jim Hermanson, Tom Smith, Pat Ryan and the officers and membership of SBE Chapter 24.

Thanks to WISC-TV for maintaining the web server for the Chapter 24 Web page!

Thanks to WKOW-TV for providing copying and folding facilities for the Chapter 24 newsletter!

AMATEUR RADIO NEWS

By Tom Weeden, WJ9H

Amateur Radio rules enforcer Riley Hollingsworth, K4ZDH, addressed hams attending an Amateur Radio reception April 21 at the National Association of Broadcasters convention in Las Vegas. The annual get-together for hams drew upwards of 1000 people. Hollingsworth credited both his boss, FCC Compliance and Information Bureau Chief Richard D. Lee, and FCC Compliance Division Chief Pamera Hairston for setting the events in motion to secure better Amateur Radio enforcement. "Pam and Rich went to the chairman [William Kennard] last October and asked for amateur enforcement," he said. "At the time they went and asked for it, they were totally loaded up with pirate broadcaster cases, and the last thing they needed was more work." But Hollingsworth said Lee, a former Marine, was serious about enforcement and, like the Marines, wants it done right. As Hollingsworth prepared to leave the podium, Lee got the last laugh by quipping, "So, are we going to take this opportunity to retest everybody?" (...at which there were many loud moans from the crowd, including from myself. —WJ9H)

The organization coordinating amateur radio aboard the International Space Station, "ARISS," has announced that one of the upcoming crew members will be a ham. Expedition commander William Shepherd, a US astronaut, recently passed his amateur radio examinations but had not yet received his call sign. The first crew deployment on the ISS is expected next January. Due to lack of rack space on the Russian-built service module, the initial complement of amateur radio gear will be attached to the wall using Velcro.

(Excerpts from "The ARRL Letter," May 1999 "QST" Magazine, and personal observations...)

SBE Listserver Info

Chapter 24 members are invited to join the chapter listserver. To subscribe, send an e-mail message to the following address: majordomo@broadcast.net In the body of e-mail message type: subscribe msnsbe. (The subject line can be left blank.) Instructions and a confirmation message will be sent to you. To post to the list, address you e-mail to: msnsbe@broadcast.net

Also, join the Wisconsin SBE Chapters listserver. To subscribe, send e-mail to: majordomo@broadcast.net Body of e-mail message: subscribe sbe-wi To post to the list, send e-mail to: sbe-wi@broadcast.net

Chapter 24
World Wide Web Site
http://www.sbe24.org

Steve Paugh is the editor for the HTML Version of this Newsletter, available monthly on the SBE Chapter 24 web page.

Token Creek PRODUCTIONS
MOBILE VIDEO
John Salzwedel
3893 Terrace Circle DeForest, Wisconsin 53532
Office: (608) 238-7575 Fax: (608) 238-4955
WebPage: www.tokencreek.com ***E-Mail:*** tcp@itis.com

FOX 47 WMSN · MADISON
7847 BIG SKY DRIVE
MADISON, WISCONSIN 53719
(608)833-0047 • FAX(608)833-5055

Richardson Electronics, Ltd.
Becky Hilborn
Broadcast Sales Specialist
40W267 Keslinger Road
LaFox, IL 60147 USA
Phone: (800) 348-5580
(630) 208-2372
FAX: (630) 208-2450
email: becky@rell.com
WWW: http://www.rell.com
Your Tube and Broadcast Component Source.

SCHARCH ELECTRONICS CO.
Small Business Communications
1105 Middleton Street
MADISON, WI 53717-1078
(608) 831-2266 (800) 831-2266

Data Broadcasting Systems

By Mike Norton

For broadcasters, the transition to digital television will have many hurdles to clear, from both business-model and technical standpoints. Moving pictures and sound in the form of digital bits will be a large change, but at the same time holds many new opportunities. One concept that many people talk about is the idea of "opportunistic data" that can be sent in the ATSC signal. Basically, when the video and audio content do not fill up the entire 19.39 MB/s data stream, additional data can be sent in the transport stream. This idea of data broadcasting does not have to wait for a station to be on the air with DTV, however.

Moving Data As Video

Currently many broadcast networks send specialized data in their video via satellite to affiliates:

- Vertical Interval Time Code (VITC)
- Network alert text for decoding/ display on a video display or printer
- Synchronized time reference for affiliates
- Closed captioning

Although each of these examples have specific uses, all of them have one thing in common: digital data converted to video for satellite transmission. The resulting video amplitude transitions from black to white are decoded back into digital ones and zeros. Vertical Blanking Interval lines 10 through 20 are available for various signals, which can include some type of data system (line 21 is a special case, in that it is reserved exclusively for closed caption use).

An example, which can be easily viewed on a waveform monitor, is closed captioning. Viewing line 21, field 1 of a captioned program looks like Figure 1.

Following horizontal sync and color burst is a seven-cycle clock run-in. This sine wave provides the data decoder a time reference, so it knows where on the video line each data bit transition will occur. By overlapping the lines of multiple frames, we can easily see the space that each bit occupies (Figure 2). In our example of closed captioning, we can easily count 16 separate bits (the first 0IRE to 50IRE transition is used as a start bit, which lets the decoder circuit know that data follows).

By doing some simple calculations, we can determine that 16 bits are transmitted every frame. So, the bits per line, multiplied by the lines per frame, multiplied by the frames per second will show the raw data rate:

16 bits x 1 field x 30 frames per second= 480 bits/second.

This is not an overwhelming data rate compared to even the slowest computer modem. Keep in mind, however, that the original closed captioning system was developed and approved for use 1976. The current guidelines for closed captioning, ANSI/EIA-608, were updated and approved in 1994, and allow both fields 1 and 2 to carry line 21 closed caption data. These changes also allow additional services to be carried in the closed captioning data stream, as well as doubling the raw

(continued on next page)

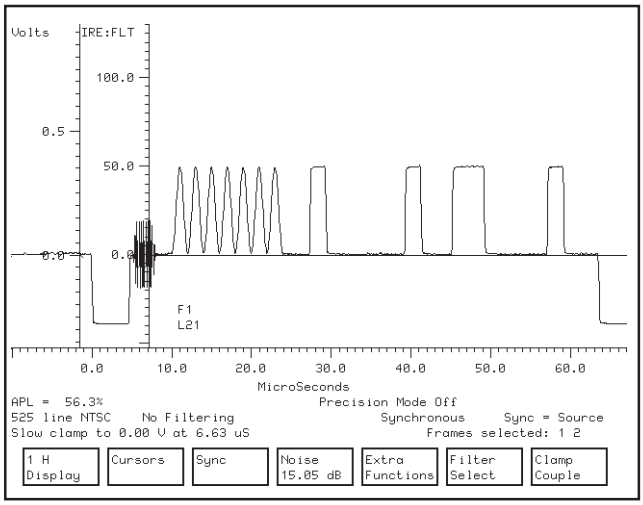

Figure 1. Waveform monitor view of typical closed caption signal, field 1 of line 21.

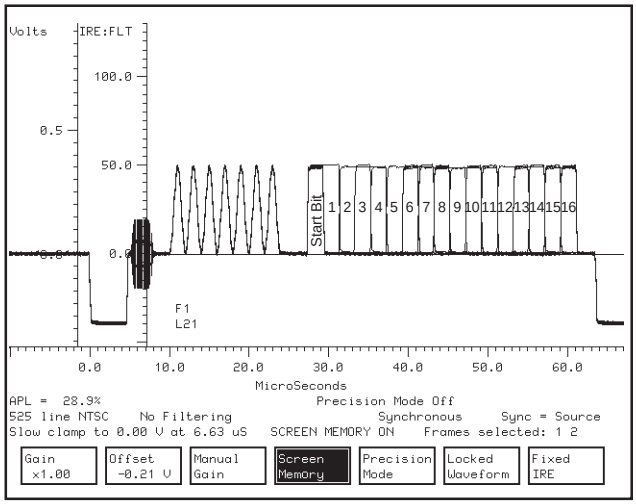

Figure 2. Closed caption signal with multiple fields displayed, showing individual data bit locations.

NATIONAL TOWER SERVICE
Daryl Snowden — Office 608-884-8205, Fax 608-884-6021, Mobile 608-751-8284
Paul Jensen — Office 608-255-0529, Fax 608-255-2599, Mobile 608-235-8559

TELEPORT MINNESOTA
Mark Durenberger, General Manager
Office (612) 330-2433
Fax (612) 330-2603
e-mail durenberger@teleportmn.com
90 South 11th Street
Minneapolis, MN 55403
GROUP W NETWORK SERVICES

ROSCOR
Thomas Sibenaller, Sales Representative
Roscor Wisconsin
2610 Van Loon Road
La Crosse, WI 54601
Phone: 608-784-6702
FAX: 608-785-0505
e-mail: sales@roscor.com

Data Broadcasting Systems (continued)

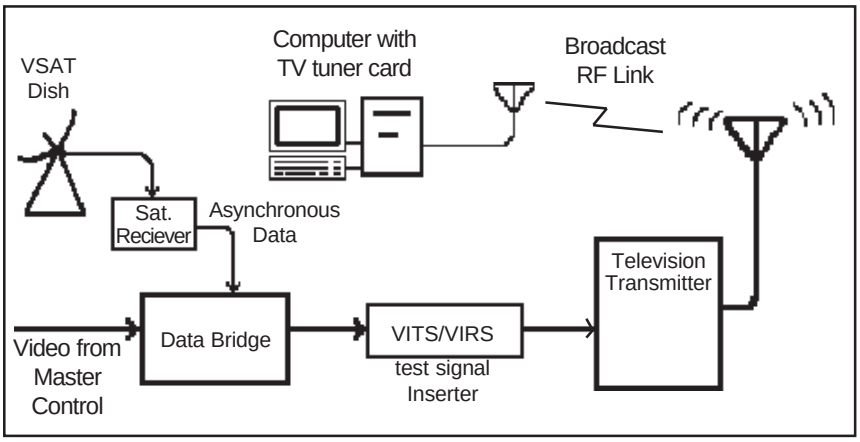

Figure 3. Simplified video flow diagram for VBI dat insertion

data rate to 960 bits/second (by utilizing two fields instead of one).

A logical step from dedicated data devices, such as stand-alone closed caption decoders, would be to deliver this broadcast data directly to a personal computer. This is now much easier to accomplish, with the development of inexpensive NTSC tuner cards which can be placed in PCs. These allow the viewing of TV signals on a computer monitor, as well as integrating various data decoding capabilites, such as the Intel Intercast system.

Faster Data Rates

With increases in technology, including more powerful microprocessors, VBI data services can be run at much higher rates than closed captioning. One organization which is involved in high speed VBI data is PBS National Datacast Inc. PBS NDI is a for-profit subsidiary of PBS Enterprises, and offers real-time nationwide broadcasting services through a partnership with PBS member stations.

Figure 3 shows a simplified diagram of the system flow. They deliver data via very small aperature terminal (VSAT) satellite feed to member stations. The recieved asynchronous data feed is connected to a piece of equipment refered to as a data bridge. This data bridge checks the data, and attempts to correct any errors encountered in the satellite delivery. The data is then processed to add forward error correction, buffered to the duration of an NTSC line of video, and converted into a 0 – 80 IRE square wave.

This square wave is then keyed onto the desired VBI line of a stations program video. Once part of the video signal, the data passes through the remainder of the equipment in the air chain (provided that time base correctors and processing amplifiers are not configured to blank out information in the vertical interval).

The broadcast signal reaches a personal computer equipped with a tuner card, the RF signal is demodulated to baseband video, and the VBI lines are then searched for decodable data. Once the data has been recovered, it can be saved to file on the hard drive, or manipulated by a software application.

WaveTop Service

On example of a nationwide service which is providing data content for broadcast-ready computers is WavePhore Inc service *WaveTop*, available via the vertical blanking interval (VBI) of analog television stations. The WaveTop service is carried by the PBS National Datacast Inc. network, and is a North American Basic Teletext Specification (NABTS) VBI signal (Figure 4).

WaveTop's download rate is 30 Kbps per second (by utilizing 2 VBI lines, both fields). WaveTop content is constantly being broadcast and saved to a users hard drive; once an entire file

(continued on page 6)

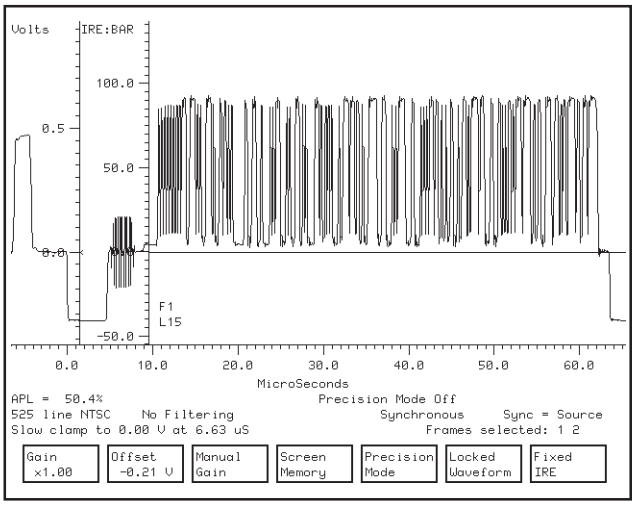

Figure 4. NABTS compliant VBI data signal carrying WaveTop data signal, with 264 bits per line.

Save Rack Space!
Dual Timer Single rack unit (5" deep)
Up Timer : Start/Stop & Reset +foot switch
Clock : Easy Set & Synchro, or external ref
Read about Smart & Easy features at
http://members.aol.com/sloop26/maneylog.htm
maney-logic 608-277-8001

VIDEO IMAGES
Milwaukee
Madison
Chicago
Indianapolis
Video Images, Inc.
2137 S. Stoughton Road • Madison, WI 53716
Phone:(608) 221-8888 • FAX:(608)221-9252
Internet: http://www.videoimages.com/

WISC-TV
CBS
MADISON 3

Data Broadcasting Systems (conclusion)

has been received, there is immediate access to it. When you click to view a page, game, movie clip or other large file in WaveTop, you see it as fast as your computer can load it. This method of continuously storing data has the advantage of allowing the illusion of "instant access," to their content. Disadvantages to this technique include the fact that the receiveing computer must be on and running the WaveTop capture/viewing software all the time, and you only have access to the material that their content partners choose to send.

What data to send?

One of the big questions that needs to be answered by any company considering data broadcast is, "What data can we transmit, that we can also make money on?" In the case of the WaveTop service, they send a range of information from news, sports, and entertainment. This is based on an advertiser-supported basis, similar to broadcast television and many internet sites. Some of their content suppliers include USA Today, ZDNet, The Weather Channel, CBS SportsLine, PBS Online, and Time Inc.

Implications For DTV

When television stations move from analog broadcast to DTV, there may be opportunities for inserting variable bit rate data, rather than the fixed rate data which is currently possible with analog VBI methods. The amount will be based on the data needed to transport the standard definition or high definition video and audio. Multiplexing and controlling the rate of any additional data payload into the ATSC stream will be one of the challenges to be overcome.

A larger challenge may very well be finding a datacast service which can be a profit center for the station. Whether it is a subscription service or advertiser-supported, it will need the support required for handling the marketing, sales, and administrative functions, in addition to the technical operations and monitoring requirements. Stations who experiment or implement a data broadcast service with their analog channel could have a head start in transitioning to DTV, and the data opportunities that it holds.

(*Information from www.wavetop.net, NAB Engineering Handbook, PBS National Datacast Inc.)*

FCC LOCAL LEGALS

Compiled by Tom Smith

GRANTED

WGLR-FM, 97.7 MHz, Lancaster, WI.

QueenB Radio Wisconsin Inc. was granted a construction permit to change transmitter location from the coordinates of 42-57-08/90-40-14 to 42-51-48/90-42-11, increase height above average terrain from 72 meters to 147 meters and effective radiated from 3.9 KW to 11.5 KW. The transmitter is being moved from a site southeast of Lancaster to a site north of Lancaster. Application was granted on April 12, 1999.

WPKO (FM), 105.9 MHz, Evansville, WI.

TBK Communications was granted a construction permit to increase power for WPKO from 1.4 KW to 1.7 KW. Action was taken on April 27, 1999 and announced on April 30, 1999.

SBE Short Circuits - May 1999

By John L. Poray, CAE
SBE Executive Director

NEW RADIO CHIEF OPERATORS HANDBOOK PUBLISHED BY SBE

SBE has released a brand new book written by Jack Layton, titled, "SBE Radio Chief Operator Handbook." This 84 page book is written for the non-technical operations manager, program director, air personality, GM or station owner who are many times appointed the Chief Operator at radio stations today. The Chief Operator is legally charged by FCC Rules to be the "watchdog" of the facility, assuring that the station operates in compliance with the terms of the Station License and FCC Rules.

The author is a 40 year veteran of broadcast engineering. Jack Layton has served as Chief Engineer at radio stations WVON and WGCI, Chicago, WIND in Chicago and KDKA in Pittsburgh. He is owner of Layton Technical Services in Pittsburgh. He is a regular contributor to "Radio World Newspaper" and "The Radio Shopper Magazine." He has also authored' "Directional Antennas Made Simple," and "Directional Broadcast Antennas: A Guide to Adjustment, Measurement and Testing." He is certified by SBE as a Certified Professional Broadcast Engineer and holds the Amateur Extra Class License, W9UK.

The SBE Radio Chief Operators Handbook is now available from the SBE National Office. Call (317) 253-1640 to order. You may also fax your order to (317) 253-0418. Use your VISA, MasterCard or American Express. The cost is $35 per copy for SBE members and $45 for non-members, plus $3 shipping within the U.S.

Jim Pianowski Tektronix, Inc.
Central Regional Manager **Video and Networking Division**
Western Area 515 West Algonquin Road, Ste 100
Arlington Heights, Illinois 60005
james.j.pianowski@tek.com
800 458-7587 ext. 6797 Voice Mail
847 431-5755 Mobile
847 734-6797 847 381-4738 Home
847 364-7582 Fax 800 452-1368 Pager
Tektronix®

BCS Wireless
• Tower Construction
• Maintenance
• HDTV upgrades
John W. Crooks *(608) 527-5670*
Vice President
Over 40 years of service to the Broadcasters.

HARRIS
HARRIS CORPORATION
Communications Sector
Broadcast Systems
1913 Fairoak Road
Naperville, IL USA 60565
TOM HARLE
District Sales Manager
Radio Systems
ISO 9001
telephone 1-630-420-8899
24-hr service 1-217-222-8200
Broadcast Ctr. 1-800-622-0022
facsimile 1-630-420-9171
email: tharle@harris.com
www.harris.com
next level solutions

FCC Rulemakings

Compiled by Tom Smith

Report No. MM 99-4
Auction Procedures for Competing Commercial Broadcast license and ITFS Applications

The FCC reaffirmed its decision to use auctions to determine the winning applicants for broadcast and ITFS licenses. This action was in response to 31 petitions for reconsideration. They upheld all of their proposed rules including bidding credits, minimum bids, use of a uniformed bidding window system, and rejected requests for reimbursement by petitioners who had previously filed applications under the comparative hearings.

The FCC did amend the anti-collusion rules to allow for low power TV and FM translator applicants to work out settlements or engineering solutions before auctions commenced. This action was adopted and released on April 15, 1999.

MM Docket No. 98-93; FCC 99-55
1998 Biennial Regulatory Review - Streamlining of Radio Technical Rules

The FCC modified its rules to extend first come/first served processing to applications for AM, noncommercial FM, and FM translators. The changes that a station could make as a minor change would include moving to an adjacent channel, changing antenna height, power, or location for translators as long as they continue to serve part of their existing 1 mV service area, and changing hours of operation for AM stations. This would make the rules for minor changes for these stations similar to the existing rules for commercial FM stations.

Noncommercial FMs would also be allowed to file up to four contingent applications. A contingent application is one where the construction or change of one stations facilities is dependent on changes to another stations facilities. The FCC now requires that it grant the application for changes in one stations facilities before it will accept the application for changes to another stations facilities. This rule would allow multiple changes to noncommercial stations without exposing the station, that was required to wait, to competing applicants.

This action was adopted on March 23, 1999 and released on March 30, 1999. It was published in the FEDERAL REGISTER on April 21, 1999 on pages 19,498-19,503.

From FCC Press release (www.fcc.gov) and the FEDERAL REGISTER (www.access.gpo.gov).

CHAPTER 24 SUSTAINING MEMBERS

THANKS TO ALL OUR SUSTAINING MEMBERS:

Alcatel USA
Alpha Video
BCS Wireless
Belden Wire and Cable
CTI
Clark Wire and Cable
Harris Corporation
Hewlett-Packard
maney-logic
National Tower Service
Norlight Telecommunications
Panasonic Broadcast
Richardson Electronics
Roscor Wisconsin
Scharch Electronics
Skyline Communications
Sony Broadcast
Tektronix
Teleport Minnesota
Token Creek Productions
Video Images
WISC-TV 3
WKOW-TV 27
WMSN-TV 47
WMTV-TV 15

HEWLETT PACKARD
Jon S. Gedymin
Video Sales Manager
Midwest Region
Hewlett-PackardCompany
250 North Patrick Boulevard, Suite 100
Brookfield, Wisconsin 53045-9945
800/477-6111 Ext. 2263
Fax 414/569-0966
Internet jon_gedymin@hp.com

SONY
Kevin Peckham
Account Manager
Broadcast Products Division
Sony Communications Products Company
1200 North Arlington Heights Road
Itasca, Illinois 60143
Telephone (608) 271-3778
(708) 773-6046
Service Center (708) 773-6037
Emer. Tech. Assist. (201) 833-9533
National Parts Center (800) 538-7550

David Thormodsgaard
Broadcast Sales Engineer
thor@alphavideo.com
800-388-0008 • (612) 841-3308
Cellular (612) 860-2813
7711 Computer Avenue
Edina, MN 55435
(612) 896-9898
FAX (612) 896-9899
www.alphavideo.com
Alpha Video

CLARK WIRE & CABLE
1355 ARMOUR BOULEVARD
MUNDELEIN, IL 60060-4401
(800) CABLE-IT • (847) 949-9944
FAX: (847) 949-9595
E-MAIL: SALES@CLARKWC.COM
WWW.CLARKWC.COM

Panasonic
Broadcast & Television Systems Company
HERB VAN DRIEL
Direct Sales Manager
Entertainment Systems Division
Atlanta 1996
The Official Broadcast Equipment of the 1996 Olympic Games.
1707 N Randall Road
E-Zip: 1-C-3 WI Tel: 608.355.0662 HQ Tel: 847.468.5160
Elgin,IL 61023 WI FAX: 608.355.0663 HQ Fax: 847.468.5161
Division of Matsushita Electric Corporation of America

27 abc
WKOW
Madison
5727 Tokay Boulevard
Madison, Wisconsin 53719
(608) 274-1234
Fax: (608) 274-9514

SBE NATIONAL

Society of Broadcast Engineers, Inc.
8445 Keystone Crossing
Suite 140
Indianapolis, IN 46240

Office (317) 253-1640
Fax (317) 253-0418
Job Line (317) 253-0474
http://www.sbe.org

CTI
http://www.CTIinfo.com
email - cti@CTIinfo.com
Phone - 608-831-4636
Fax - 608-836-1840
VCR Controllers
Character Generators
Satellite Antenna Controllers
Broadcast / Cable Television Consulting

JAMES F. DOHERTY
Traffic Supervisor
Satellite & Video Services
Norlight TELECOMMUNICATIONS
275 North Corporate Drive
Brookfield, WI 53045-5818
414.792.7708 Fax: 414.792.7717
e-mail: jfd@norlight.com

SKY LINE COMMUNICATIONS, LTD. • MADISON, WI ANTENNA SPECIALISTS • TOWER ERECTORS
RICHARD H. WOOD
President
1965 West Ridge Rd.
P.O. Box 51
Cottage Grove, WI 53527
608 / 839-4075
FAX: 608 / 839-4985
TOWERS • ANTENNAS
CONSTRUCTION • MAINTENANCE

Belden
Belden Wire & Cable Company
4218 South Regal Manor Court
New Berlin, Wisconsin 53151
Phone: 414 827 0270
Facsimile: 414 827 0374
Phone Mail: 800 241 7564
Box 2611
Jan Reesman
Sales Representative
http://www.belden.com

ALCATEL
Jim Rigsby
Account Executive
Private, State,
Local Government
Alcatel Network Systems
2800 West Higgins Road
Suite 825
Hoffman Estates, IL 60195
Tel: (847) 490 2076
Fax: (847) 490 2073
E-mail: james_a_rigsby@aud.alcatel.com

NBC 15 WMTV • MADISON
PHONE 608-274-1515
FAX 608-271-5193
615 Forward Drive
Madison, WI 53711
WORKING FOR YOU!
www.nbc15.com feedback@nbc15.com

SBE Chapter 24 Newsletter
2029 Greenway Cross #11
Madison, WI 53713-3000

FIRST CLASS MAIL

Newsletter edited on Pagemaker 5.0 by: Mike Norton
Contributors this month: Steve Paugh, Tom Smith, Fred Sperry, and Tom Weeden.
Thanks to Leonard Charles for his work on the Chapter 24 WWW page.

© 1999 by SBE Chapter 24, Inc. Views expressed herein do not necessarily reflect the official positions of the Society, its officers, or its members. SBE Chapter 24, Inc. regrets, but is not liable for, any omissions or errors. The Chapter 24 Newsletter is published twelve times per year. Other SBE Chapters are permitted to use excerpts if attributed to the original author, sources, and SBE Chapter 24.

MAY MEETING and PROGRAM

Society of Broadcast Engineers
CHAPTER 24 MADISON, WISCONSIN
Thursday, May 20, 1999

EAS for Cable

This month's program covering the Emergency Alert System for Cable TV will be presented by Neal McLain, Project Manager for Communication Technologies, Inc. It will include an explanation of the equipment configuration in a cable TV headend, and how EAS equipment is integrated into it. Particular emphasis on "selective override" agreements between broadcasters and cable operators will be covered. This is a encore presentation that was originally presented at the WBA conference in Green Bay last summer, but has been updated to reflect recent FCC actions.

The chapter will provide pizza at WISC-TV at 6:00pm.

Meeting and Program
at 7:00pm
at WISC-TV
7025 Raymond Road.

Visitors and guests are welcome at all of our SBE meetings!

1999 UPCOMING MEETING/PROGRAM DATES:

Day	Date	Program
Tuesday	June 22	T.B.D.

Program Committee:	Kerry Maki	Denise Maney	Steve Zimmerman	Mark Croom
	833-0047	277-8001	274-1234	271-1025